H18XDS9 FORKLIFT

18.0T DIESEL HEAVY DUTY FORKLIFT

DIMENSIONS

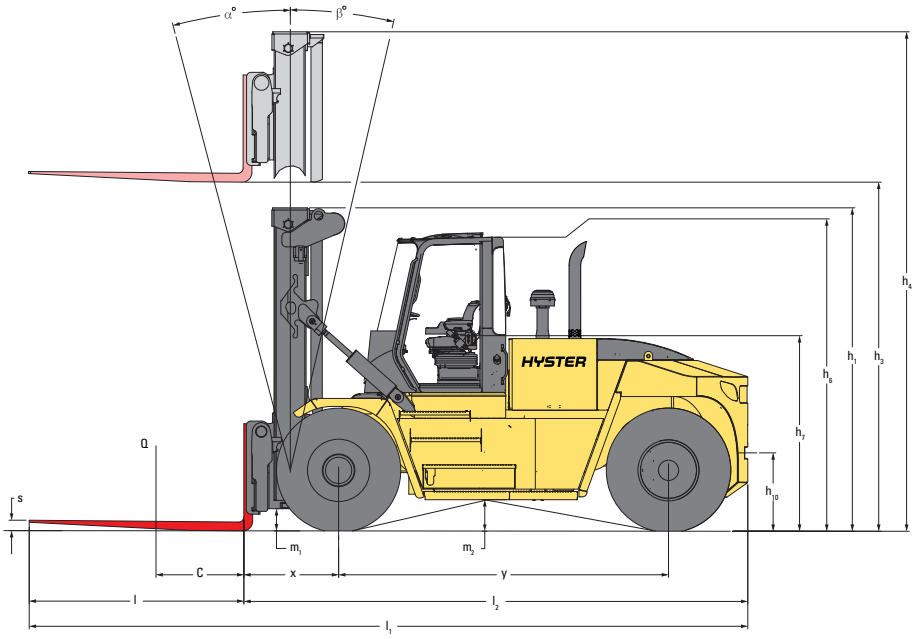

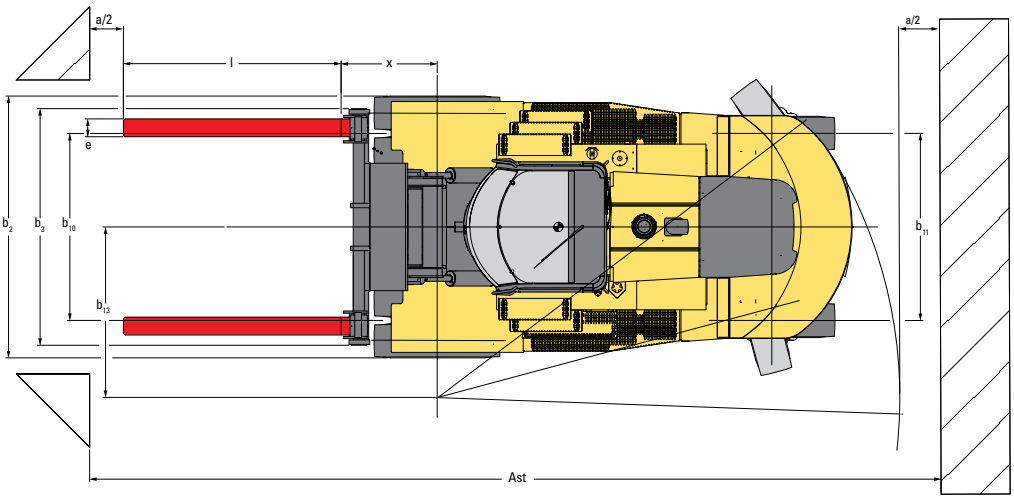

◔ = Centre of gravity of unladen truck

A_{ST} = $W_a + x + l_6 + a$ (if $b_{12}/2 < b_{13}$)

A_{ST} = $W_a + ((l_6+x)^{\wedge 2} + (b_{12}/2-b_{13})^{\wedge 0.5} + a$ (if $b_{12}/2 > b_{13}$ and $W_a > b_{13+} b_{12}/2$)

A_{ST} = $b_{13} + b_{12}/2\ ((l_6+x)^{\wedge 2} + (b_{12}/2-b_{13})^{\wedge 0.5} + a$ (if $b_{12}/2 > b_{13}$ and $W_a < b_{13+} b_{12}/2$)

a = Minimum operating clearance = 10% of A_{ST}
(VDI standard = 200 mm BITA recommendation = 300 mm)

l_6 = load lengths

b_{12} = load width

H18XDS9 FORKLIFT

18.0T DIESEL HEAVY DUTY FORKLIFT

H18XDS9 / H18XD9 / H20XDS9 / H20XD9 SPECIFICATIONS

GENERAL	1-1	Manufacturer			HYSTER		HYSTER		HYSTER		HYSTER	
	1-2	Model designation			H18XDS9		H18XD9		H20XDS9		H20XD9	
	1-3	Powertrain / drivetrain			Diesel		Diesel		Diesel		Diesel	
	1-4	Operator type			seated		seated		seated		seated	
	1-5	Load capacity at load center, nominal	Q	kg	18,000		18,000		20,000		20,000	
	1-6	Load center distance	c	mm	900		900		900		900	
	1-8	Load distance	x	mm	1,134		1,134		1,117		1,117	
	1-9	Wheelbase	y	mm	3,500		3,750		3,500		3,750	
WT.	2-1	Service weight		kg	27,669		27,052		30,030		28,858	
	2-2	Axle loading with load, front / rear		kg	42,338	3,331	41,681	3,371	46,343	3,687	45,474	3,384
	2-3	Axle loading without load, front / rear		kg	13,878	13,791	13,918	13,134	14,817	15,214	14,716	14,143
WHEELS	3-1	Tyre type			Pneumatic		Pneumatic		Pneumatic		Pneumatic	
	3-2	Tyre size, front			14.00 - 24 24PR		14.00 - 24 24PR		14.00 - 24 24PR		14.00 - 24 24PR	
	3-3	Tyre size, rear			14.00 - 24 24PR		14.00 - 24 24PR		14.00 - 24 24PR		14.00 - 24 24PR	
	3-5	Wheels, number front / rear (x = driven wheels)			x 4 / 2		x 4 / 2		x 4 / 2		x 4 / 2	
	3-6	Tread, front	b_{10}	mm	2,095		2,095		2,095		2,095	
	3-7	Tread, rear	b_{11}	mm	2,108		2,108		2,108		2,108	
DIMENSIONS	4-1	Mast tilt, forward / backward	α/β	deg	10° / 12°		10° / 12°		10° / 12°		10° / 12°	
	4-2	Height, mast lowered **(1)**	h_1	mm	4,142		4,142		4,230		4,230	
	4-3	Free lift	h_2	mm	0		0		0		0	
	4-4	Lift **(2)**	h_3	mm	4,550		4,550		4,550		4,550	
	4-5	Height, mast extended	h_4	mm	6,417		6,417		6,505		6,505	
	4-7	Cab height (open cab)	h_6	mm	3,401		3,401		3,401		3,401	
	4-7-1	Height of overhead guard (closed cab)	h_6	mm	3,428		3,428		3,428		3,428	
	4-7-2	Height of overhead guard (closed cab w/ airco)	h_6	mm	3,428		3,428		3,428		3,428	
	4-7-3	Height of overhead guard (closed cab w/ strobe light)	h_6	mm	3,525		3,525		3,525		3,525	
	4-7-4	Height of overhead guard (closed cab w/ work lights)	h_6	mm	3,577		3,577		3,577		3,577	
	4-7-5	Height of overhead guard (closed cab w/ airco & strobe light)	h_6	mm	3,555		3,555		3,555		3,555	
	4-8	Seat height relating to SIP **(3)**	h_7	mm	2,204		2,204		2,204		2,204	
	4-12	Coupling height	h_{10}	mm	907		907		907		907	
	4-19	Overall length	l_1	mm	7,975		8,225		7,958		8,208	
	4-20	Length to face of forks **(4)**	l_2	mm	5,535		5,785		5,518		5,768	
	4-21	Overall width	b_2	mm	2,923		2,923		2,923		2,923	
	4-22	Fork dimensions ISO 2331	s/e/l	mm	100 / 200 / 2,440		100 / 200 / 2,440		100 / 250 / 2,440		100 / 200 / 2,440	
	4-23	Fork carriage type			Dual Function - Sideshift Fork Positioning QD forks		Dual Function - Sideshift Fork Positioning QD forks		Dual Function - Sideshift Fork Positioning QD forks		Dual Function - Sideshift Fork Positioning QD forks	
	4-24	Fork carriage width	b_3	mm	2,672		2,672		2,940		2,940	
	4-25	Distance over fork arms, minimum / maximum	b_5	mm	998	2,443	998	2,443	1,047	2,762	1,047	2,762
	4-30	Sideshift @ width over forks	b_8	mm	+/-361	1,721	+/-361	1,721	+/-429	1,904	+/-429	1,904
	4-31	Ground clearance, laden, below mast	m_1	mm	299		299		270		270	
	4-32	Ground clearance, centre of wheelbase	m_2	mm	374		374		374		374	
	4-33	Load dimension $b_{12} \times l_6$ crossways		mm	2,400	2,400	2,400	2,400	2,400	2,400	2,400	2,400
	4-34-1-2	Aisle width, without operating clearance	Ast	mm	8,468		8,784		8,451		8,767	
	4-34-1-2	Aisle width, with 200 mm operating clearance	Ast	mm	8,668		8,984		8,651		8,967	
	4-34-1-3	Aisle width, with 10% operating clearance	Ast	mm	9,315		9,662		9,296		9,644	
	4-35	Outside turning radius	W_a	mm	4,934		5,250		4,934		5,250	
	4-36	Internal turning radius **(6)**	b_{13}	mm	1,836		2,032		1,836		2,032	
PERFORMANCE	5-1	Travel speed, with / without load		km/h	25	25	25	25	25	25	25	25
	5-2	Lifting speed, with / without load backwards		m/s	0.30	0.33	0.45	0.50	0.25	0.28	0.38	0.42
	5-2-1	Lifting speed, with 70% load		m/s	0.32		0.47		0.27		0.40	
	5-3	Lowering speed with / without load		m/s	0.50	0.50	0.50	0.50	0.50	0.50	0.50	0.50
	5-5	Drawbar pull - 1.6 km/h | 1 mph, with / without load		kN	162	165	162	165	161	164	161	164
	5-5-1	Drawbar pull - stall, with / without load		kN	200	203	200	203	199	203	199	203
	5-7	Gradeability - 1.6 km/h | 1 mph, with / without load **(7)**		%	39	33	39	34	35	32	36	34
	5-7-1	Gradeability - stall, with / without load **(7)**		%	50	33	51	34	44	32	46	34
	5-9	Acceleration time, with / without load		sec	On request		On request		On request		On request	

(1) Centre of drive axle to front face of forks
(2) Unladen with new tyres
(3) Bottom of forks
(4) Full suspension seat in depressed position
(8) Distance centre truck to centre of internal turning radius
(13) Weights are based on the following specifications: Complete truck with cab, pneumatic tyres, mast as specified, carriage as specified