527-58 AGRI TELEHANDLER

2.5T DIESEL 5.8M TELEHANDLER

MAX. PAYLOAD: 2700kg (5952lb) MAX. LIFT HEIGHT: 5.8 m 19ft)

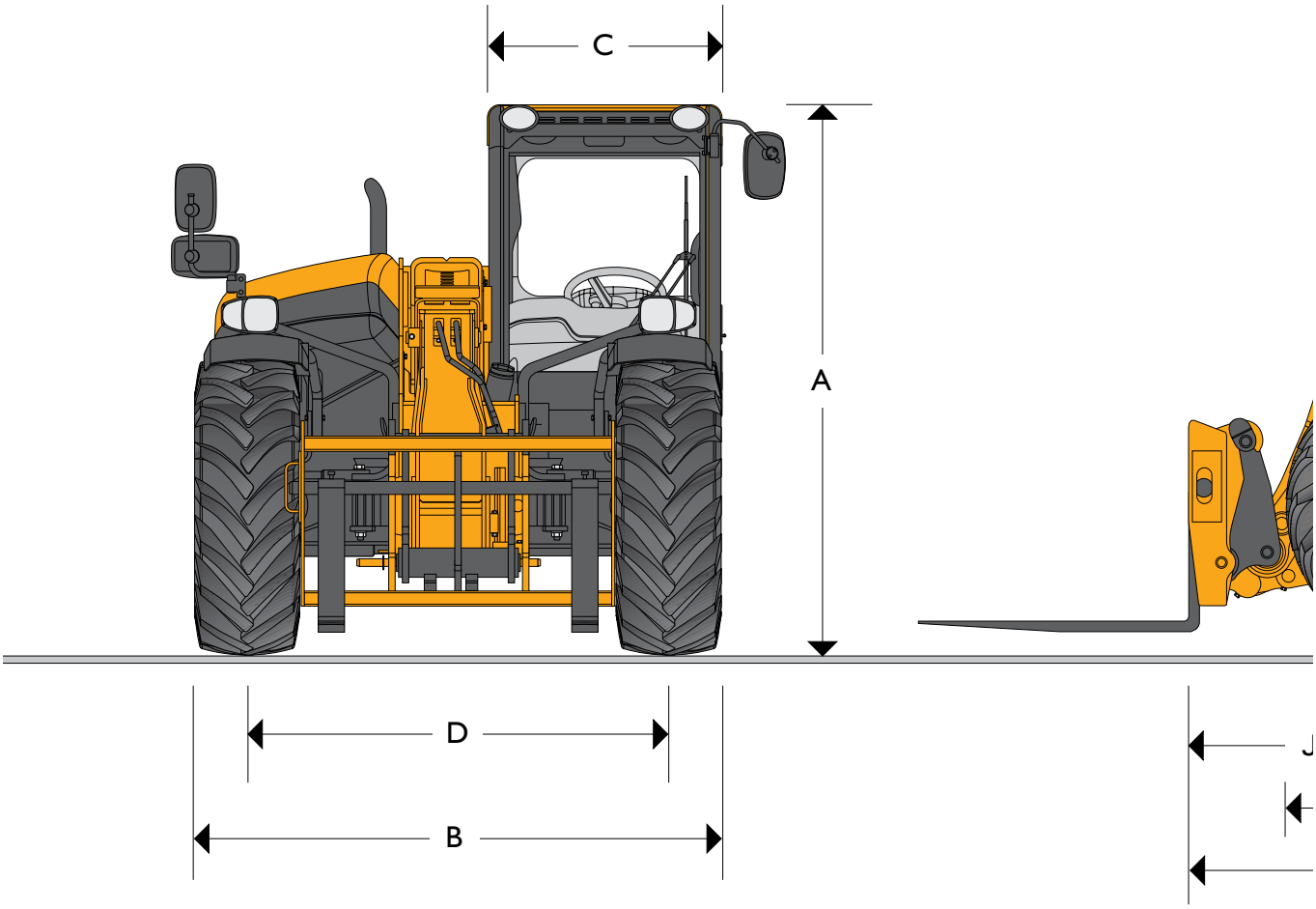

STATIC DIMENSIO

			Low cab 20" tyres	Standard cab 24" tyres
A	Overall height*	m (ft-in)	2.00 (6-7)	2.15 (7-10)
B	Overall width (over tyres)*	m (ft-in)	2.04 (6.8	2.10 (6-10)
C	Inside width of cab	m (ft-in)	0.88 (2-10)	0.88 (2-10)
D	Front track	m (ft-in)	1.60 (5-3)	1.70 (5-7)
E	Wheelbase	m (ft-in)	2.61 (8-7)	2.61 (8-7)
F	Overall length to front tyres	m (ft-in)	3.73 (12-2)	3.83 (12-6)
G	Overall length to front carriage	m (ft-in)	4.42 (14-6)	4.42 (14-6)
H	Ground clearance	m (ft-in)	0.3 (1-0)	0.36 (1-2)
J	Front wheel centre to carriage	m (ft-in)	1.20 (3-11)	1.20 (3-11)

K	Re
	Ca
	Ca
	Ou
	We
	Ty

*Deper

Note: I

527-58 AGRI TELEHANDLER

2.5T DIESEL 5.8M TELEHANDLER

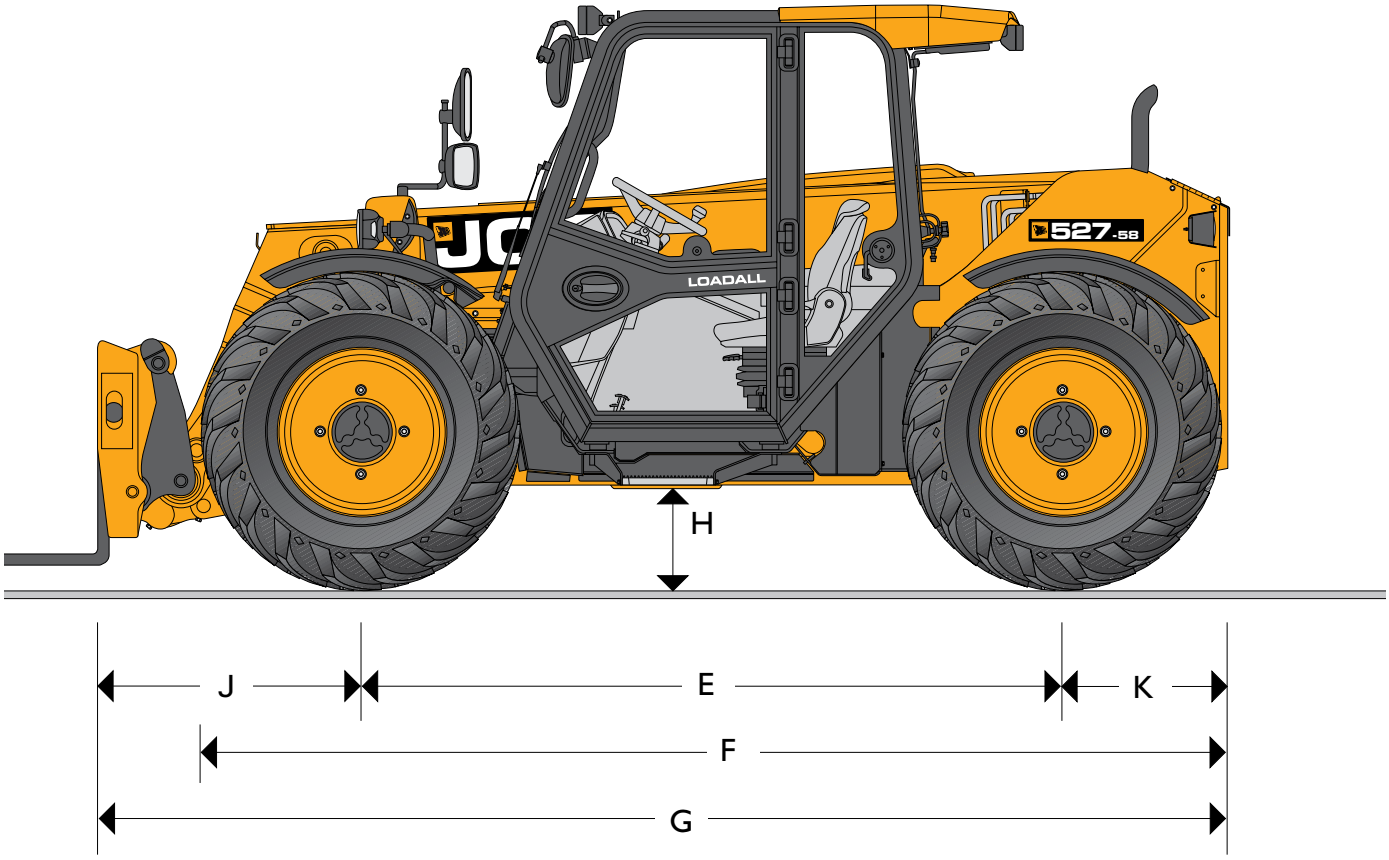

ATIC DIMENSIONS

yres			Low cab 20" tyres	Standard cab 24" tyres
K	Rear wheel centre to rear face	m (ft-in)	0.61 (2-0)	0.61 (2-0)
	Carriage roll back angle	degrees	40	40
	Carriage dump angle	degrees	40	40
	Outside turn radius (over tyres) 4WS	m (ft-in)	3.15 (10-4)	3.46 (11-4)
	Weight	kg (lb)	5900 (13007)	5900 (13007)
	Tyres		308/75xR20	405/70xR24

*Dependant upon tyre specified.

Note: Machine shown with standard cab, 24" tyres, and optional roof mounted air conditioning.